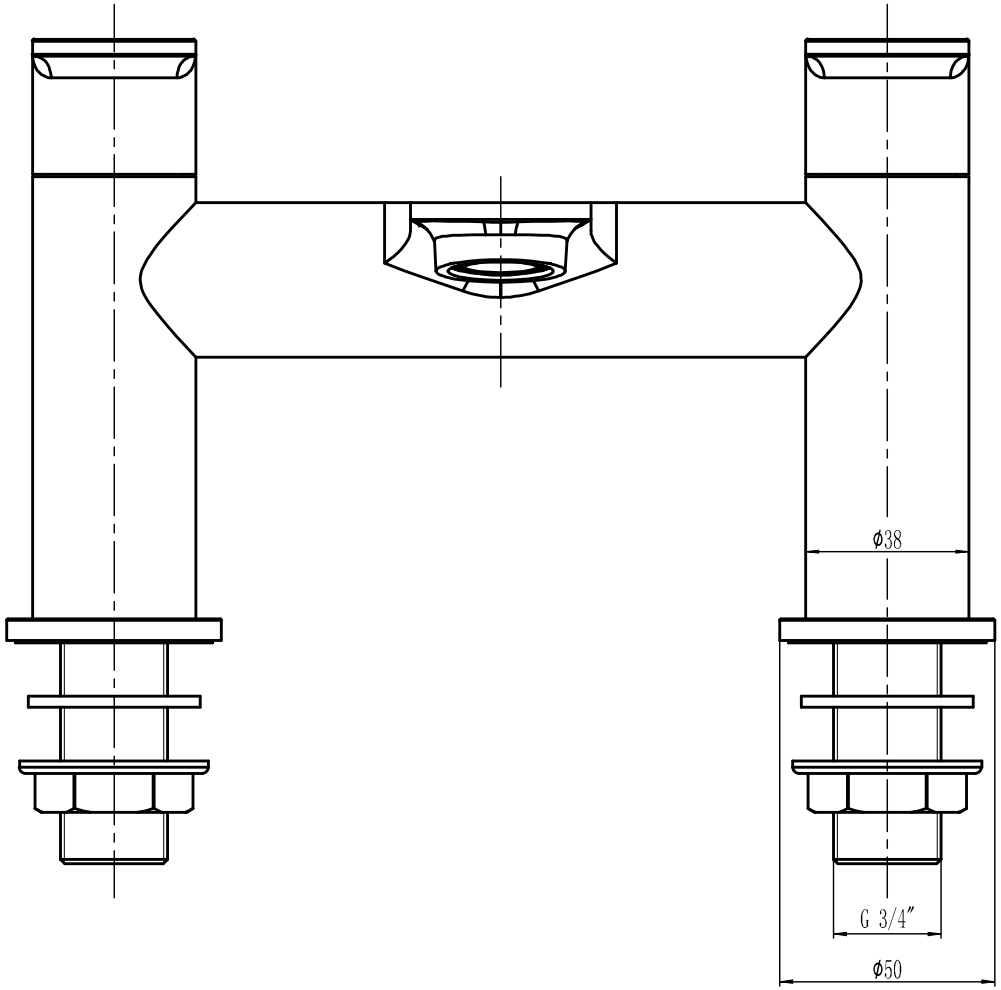
ϕ38
G 3/4"
ϕ50

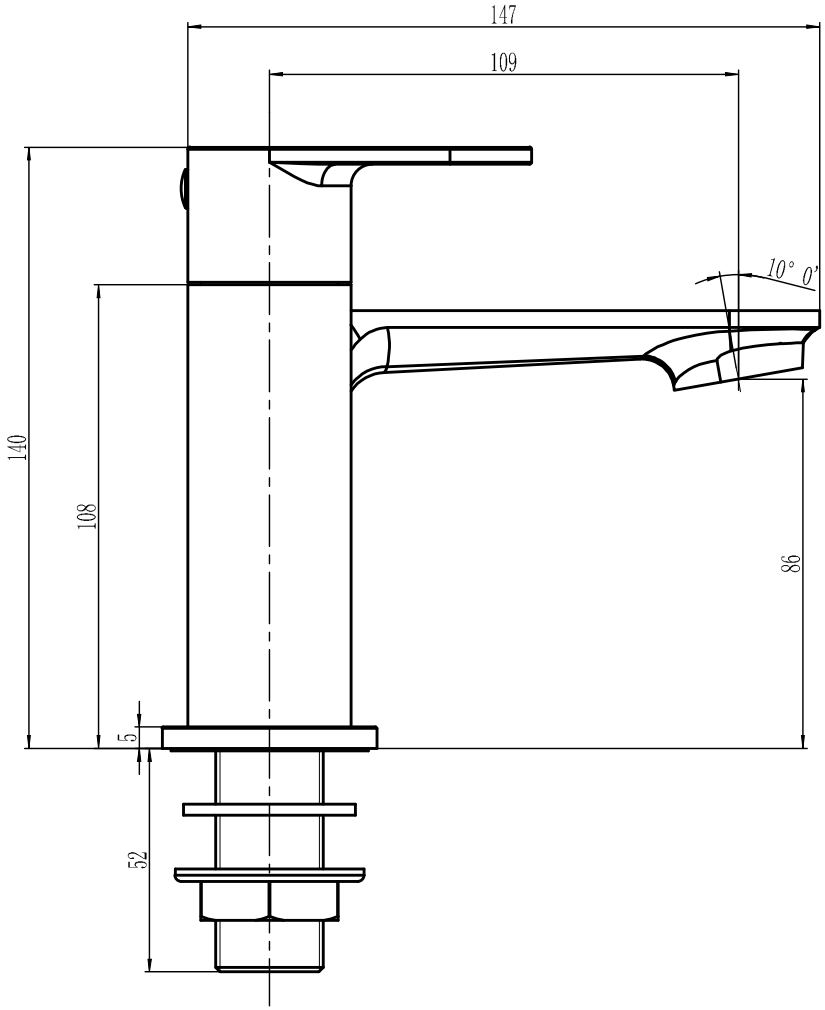
147
109
10° 0'
140
108
86
5
52