DATA SHEET

Artesan®

134.ACHCCP **Artesan Semi-Comfort Height Rimless pan**

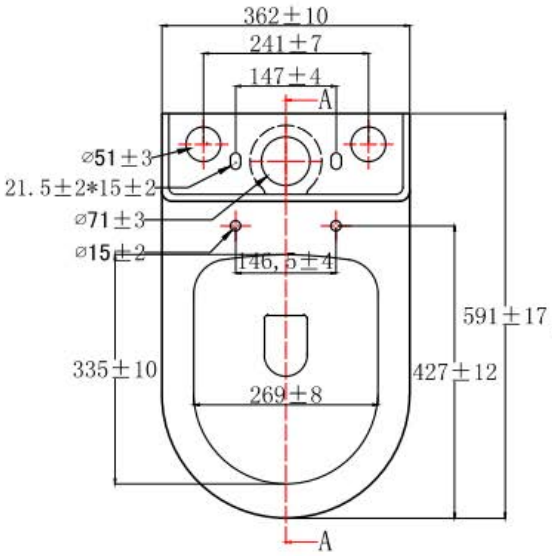

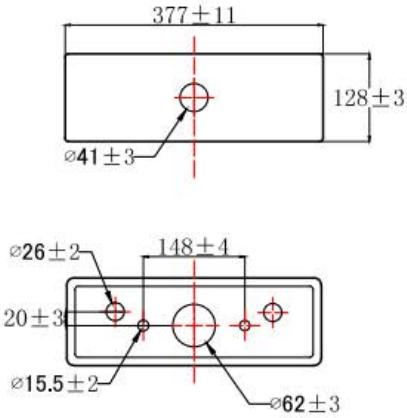

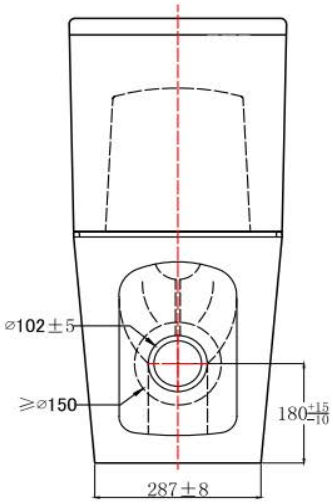

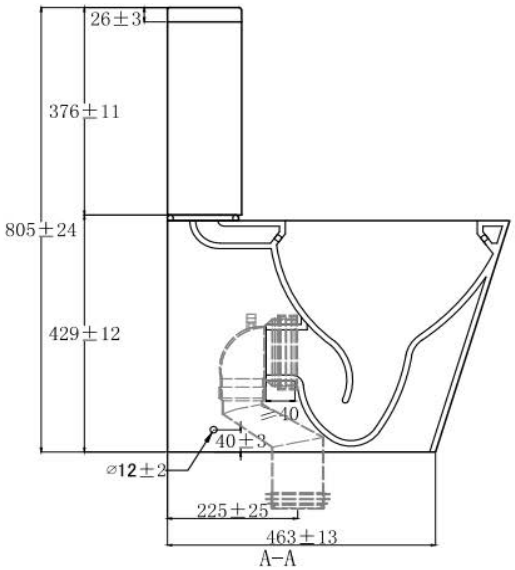

WEIGHT: 33KG

MATERIAL: Vitreous China

COLOUR: White

TECHNICAL: Rimless Comfort Height Closed Back Pan
Cistern with WRAS approved
Push Button fittings

4.5/3Ltr Flush

SEAT OPTIONS:

1 Round Slim Soft Close Seat with quick release hinges - 134.ASCSN

2 Round Wrap Over Soft Close Seat with quick release hinges - 134.ARSCS

NOTE: Items sold separately