Name	Valarte Washbasin Unit
Collection	Valarte
Depth	53 cm
Width	65 cm
Washbasin colour	White
Syphon	Not Included
Lighting	No
Finish-Body	Thermoform
Guarantee	2 Years
Washbasin Type	Ceramic Washbasin
Door Hinge Position	Left
Grip	Chrome
Colour	Matt White
Designer	VitrA Design Team
Tap Hole Options	1 Tap Hole

Product Code: 62150

Description

65 cm, with doors, with vanity washbasin,one faucet hole, Matte White, left

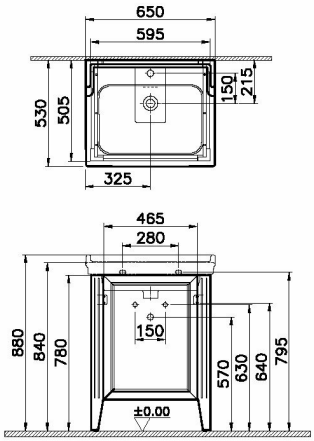

VitrA reserves the right to make changes in products and technical details without prior notice.
All drawings contain the necessary measurements which are subject to standard tolerances. For exact measurements, in particular for customized installation scenarios, it can only be taken from the finished ceramic product.