DATA SHEET

Artesan®

Ariel Rimless Close Coupled Closed Back WC

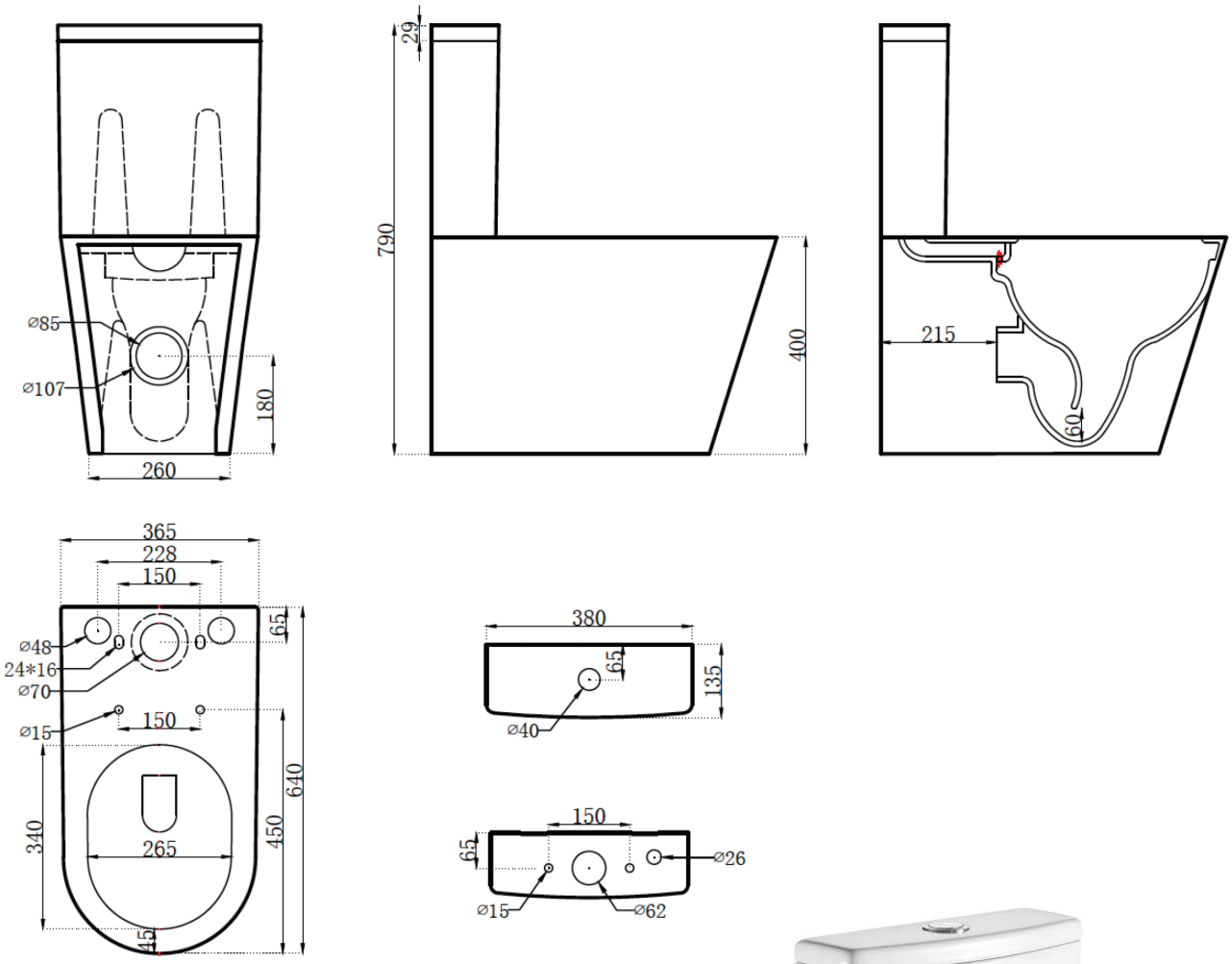

Codes: Ariel close coupled closed back pan (134.ARPANC) + Artesan Cistern (134.ACISC)

Flushing: Top dual flush push button – 4.5/3 Ltr

Material: Vitreous china

Weight: 41kg combined

Colour: White

Technical: Rimless pan, WRAS approved fittings

Note: Seat sold separately, suitable for use with Artesan slim soft close seat (134.ACSCN) or Artesan wrap soft close seat (134.ARSCS)