DATA SHEET

THE TUNBRIDGE WELLS
Brassware Co.

01.LTR **Leo Chrome & White Radiator**

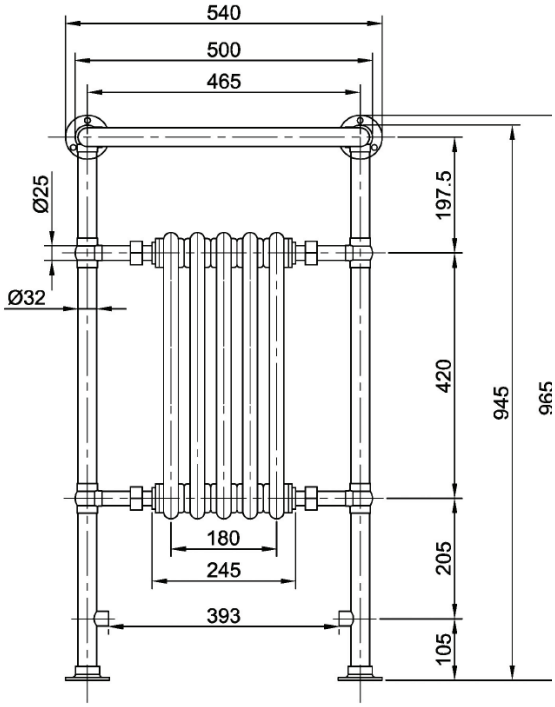

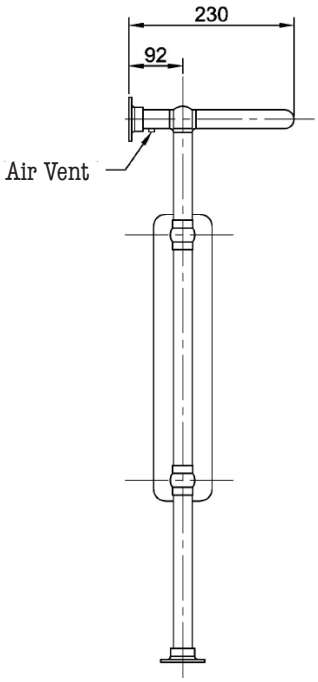

10 YEAR GUARANTEE

Radiator Specification

Finish: Chrome & white

Material: Steel

Warranty: 10-year manufacture

Connections: ½"

Max working pressure: 10 bar

Features and Benefits

Traditional style mixed with contemporary functionality

Excellent heat output

Additional:

Excludes Valves

Code	**Finish**	**Height** (mm)	**Length** (mm)	**Depth** (mm)	**Pipe Centres** (mm)	**Output** (Watts at 60°)	**Output** (BTUs at 60°)	**Weight** (kg)
01.LTR	Chrome & white	965	540	230	393	555	1894	13.20

All dimensions are in milimetres unless otherwise stated. The information contained on this page was correct at date of issue. Fitting dimensions are provided as a guide only. Some variation may occur due to manufacturing tolerances. We pursue a policy of continuing improvement in design and performance of our products and so reserve the right to change specifications without prior notice.